INSTALLATION INSTRUCTIONS

KABELWERK EUPEN AG

KABELWERK EUPEN AG
CABLERIE D'EUPEN S.A.
KABELFABRIEK EUPEN N.V.

Malmedyer Strasse 9
B-4700 EUPEN
BELGIUM

Precautions to take during connector preparation

RF Cables

Respect bending radius

1/2" Hiflex	(5092)	4. cm
1/2"	(5128)	7. cm
7/8"	(5228)	10. cm
1"1/4	(5328 GL)	20. cm
1"5/8	(5438)	25. cm

Avoid to crush the cable
Don't twist cable
Never let the cable ends without weatherproofing (humidity, rain, dust,…)
Don't hoist a cable by his connector, always use a hoisting grip

RF Connectors

Strictly follow installation instructions
Don't loose parts
Don't cut the o-ring gasket
Don't apply silicone grease on the (white) dielectric
Remove all copper chips
Always respect specified torque

Jumper cables

All precautions for cables remain applicable for jumper cables
Every jumper cable is delivered with his test report. Don't forget to file this document!
Realise watertight connection when attaching the jumper to the feeder cable or to the antenna.

Training

KABELWERK EUPEN AG proposes training session for connector and grounding kit preparation.

In case you should require further information, please do not hesitate in contacting us.

Contact

KABELWERK EUPEN AG
Malmedyer Strasse 9
B-4700 Eupen

Marcel Louges

Product Manger RF cables
Tel. : 087 / 59.72.75
Fax : 087 / 59.70.60
Mobile : 0475 / 52.87.94
E-mail : marcel_louges@eupen.com

INSTALLATION INSTRUCTIONS

E0016 / Rev 04 Date: 04/11/1998

KABELWERK EUPEN AG
CABLERIE D'EUPEN S.A.
KABELFABRIEK EUPEN N.V.

N and 7/16 connectors for 1/2" highly flexible cables

RECOMMENDED TOOLS AND ACCESSORIES

SPTC50 B 1/2X preparation tool (used with 3/8" or larger power drill), hack saw (fine toothed blade), sharp knife and file, non-metallic scouring pad, neutral vaseline (pharmaceutical), rag.

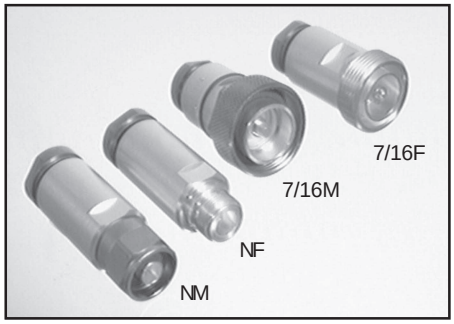

Open end wrenches:

7/16M 1x 19mm + 1x 21mm
7/16F 1x 19mm + 1x 21mm
NM 2x 19mm
NF 2x 19mm
7/16M coupling nut 1x 27mm

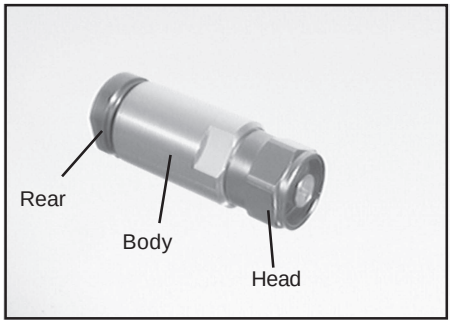

CABLE PREPARATION AND CONNECTOR INSTALLATION

Make a square cut at the end of the cable with the hack saw.

Use the **SPTC50 B 1/2X** tool mounted on a power drill to prepare the cable end to proper dimensions. Set in reverse rotation and low speed. Put the tool on the cable end, run the drill and push it slowly until it stops. Remove the tool: the cable is prepared!

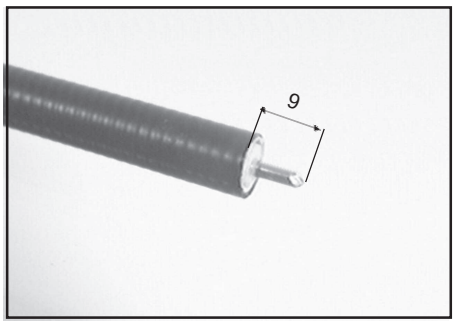

Alternatively, if you do not have the **SPTC50 B 1/2X**: Use the saw to cut through the jacket and outer conductor 9mm (6/16") back from the end of the cable. Be careful not to score the center conductor.

Use the knife to cut through to the center conductor and strip material away leaving bare center conductor. Remove the jacket 10mm (25/64") back from the end of the outer conductor. Use the file to chamfer the center conductor.

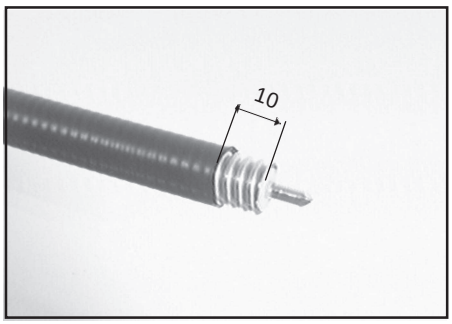

After the cable is prepared, perform the following steps :

* Use the scouring pad to clean and deburr both conductors. The copper must be clean.

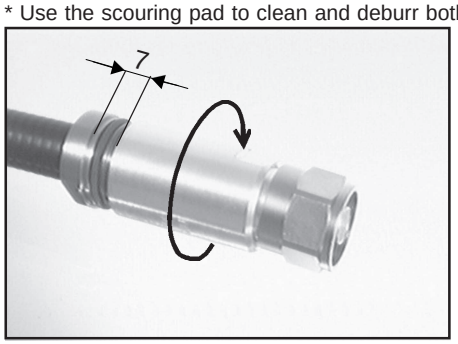

* Apply a thin film of vaseline to both conductors and on 20mm (3/4") of the jacket, being careful not to get any on the dielectric.
* Unscrew the rear so that there is a gap of about 7mm (1/4") between the rear nut and the body.
* Push the connector straight onto the cable until it stops. Screw the connector clockwise by hand until there is no axial movement between the cable and the connector.

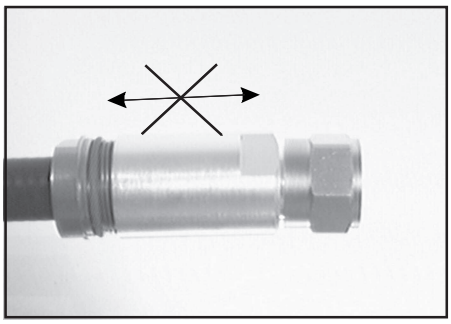

Tighten the connector until it will not move axially.

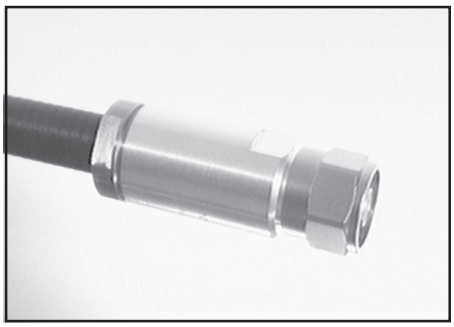

Hold the body still with one open end wrench and tighten the rear onto the body with a torque of 20Nm (15 lb-ft) maximum.

NOTICE

KABELWERK EUPEN AG disclaims any liability or responsability for the results of improper or unsafe installation practices.

KABELWERK EUPEN AG
Malmedyer Strasse 9 **B-4700 Eupen, Belgien**
Tel : +32-87-597 000 Fax : +32-87-597 100

INSTALLATION INSTRUCTIONS

E0018 / Rev 03 Date : 11/12/1998

KABELWERK EUPEN AG
CABLERIE D'EUPEN S.A.
KABELFABRIEK EUPEN N.V.

N, 7/16 and EIA 7/8" connectors with O-ring watertighting for 1/2" corrugated cables

RECOMMENDED TOOLS AND ACCESSORIES

Hack saw (fine toothed blade), sharp knife, file, flat nose pliers, nonmetallic scouring pad, neutral vaseline soaked rag, cleaning rags.

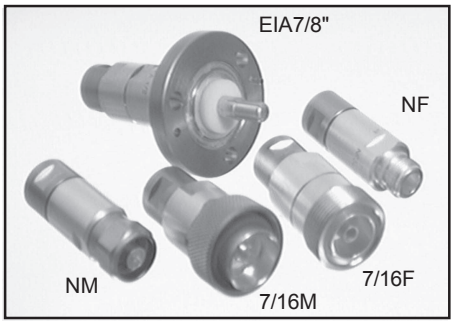

Open end wrenches :

EIA 7/8"	1x 19mm + 1x 24mm + 2x 10mm
7/16M	1x 19mm + 1x 24mm
7/16F	1x 19mm + 1x 24mm
NM	2x 19mm
NF	2x 19mm
7/16M coupling nut	1x 27mm

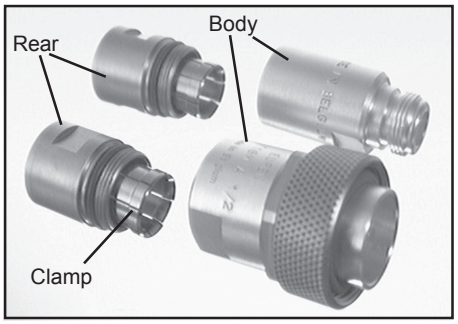

CABLE PREPARATION AND CONNECTOR MOUNTING

Make a square cut at the end of the cable with the hack saw.

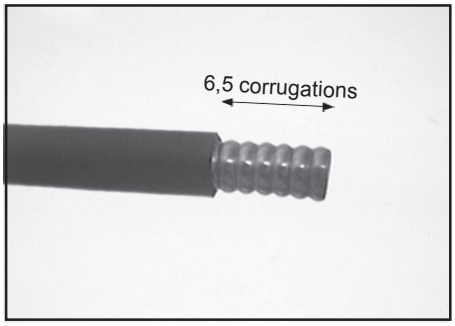

Cut and remove the jacket after the sixth complete corrugation. The jacket end must be at the top of a corrugation.

Clean the outer conductor with scouring pad. Place the O-ring gasket close to the jacket.

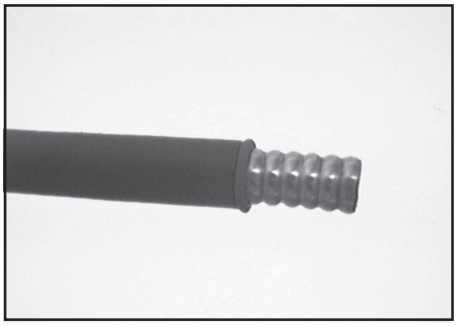

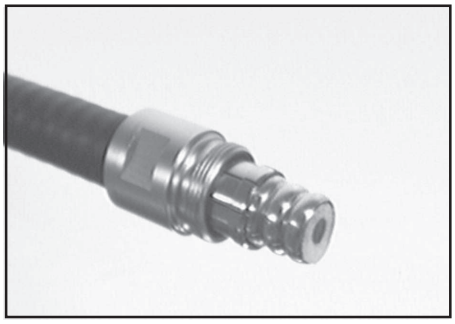

Push the rear of the connector onto the cable until it stops, pull the rear over the clamp and hold it still. Two and one half to three and one half corrugations should be visible past the clamp.

Using the flat nose pliers, grip the outer conductor and tear it so that it is flared out. Wrap it around the pliers nose (can opener method) to obtain a flared contact surface all around the cable.

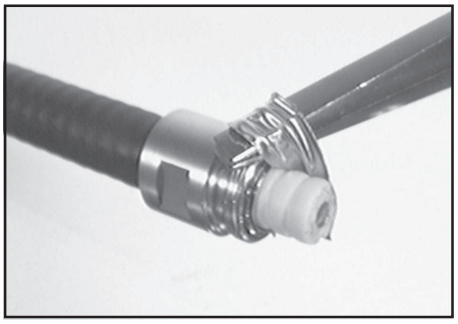

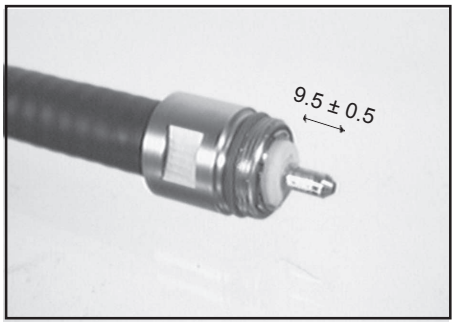

Use the knife to cut the dielectric in the first corrugation valley in front of the rear of the connector. Saw the center conductor at 9.5mm ± 0.5mm (3/8" ± 1/64") distance from the end of the dielectric. Use the file to chamfer the center conductor and clean it with the scouring pad.
Remove all chips and clean the cable end. Apply a film of vaseline on the center conductor, being careful not to get any on the dielectric

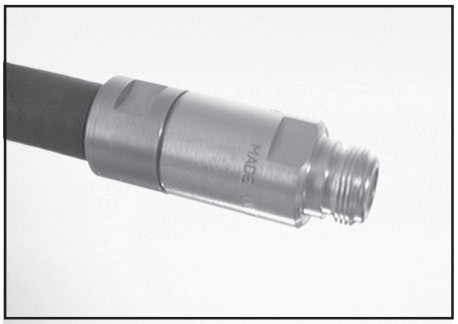

Screw the connector body onto the rear. Use the appropriate open end wrench to hold the body still and turn the rear onto it until it is tight with a torque of 20Nm (15 lb-ft).

NOTICE

KABELWERK EUPEN AG disclaims any liability or responsability for the results of improper or unsafe installation practices.

KABELWERK EUPEN AG
Malmedyer Strasse 9 **B-4700 Eupen, Belgien**
Tel : +32-87-597 000 Fax : +32-87-597 100

INSTALLATION INSTRUCTIONS

E0006 / Rev 04 Date : 05/08/1999

KABELWERK EUPEN AG
CABLERIE D'EUPEN S.A.
KABELFABRIEK EUPEN N.V.

N, 7/16 and EIA 7/8" connectors for 1/2" corrugated cables

RECOMMENDED TOOLS AND ACCESSORIES

Hack saw (fine toothed blade), sharp knife, file, flat nose pliers, nonmetallic scouring pad, Dow Corning 744 Silicone Sealant (one 90ml tube per 20 connectors), neutral vaseline soaked rag, cleaning rags.

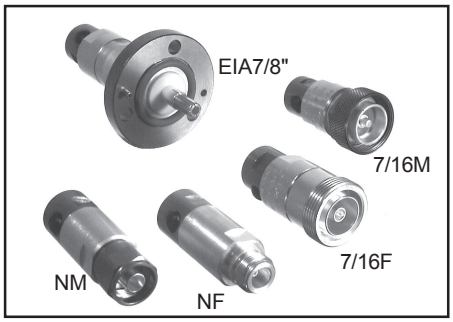

Open end wrenches :

EIA 7/8"	1x 19mm + 1x 24mm + 2x 10mm
7/16M	1x 19mm + 1x 24mm
7/16F	1x 19mm + 1x 24mm
NM	2x 19mm
NF	2x 19mm
7/16M head nut	1x 27mm

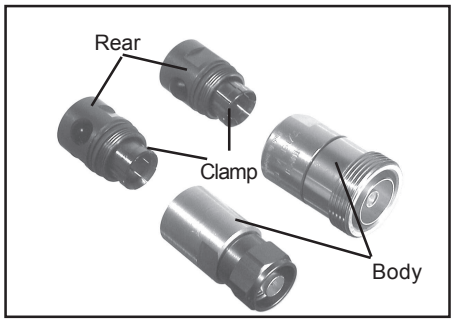

CABLE PREPARATION AND CONNECTOR MOUNTING

Make a square cut at the end of the cable with the hack saw.

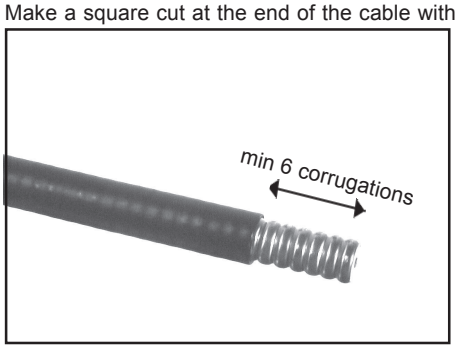

Cut and remove the jacket in the valley after the sixth complete corrugation. Clean the outer conductor with the scouring pad.

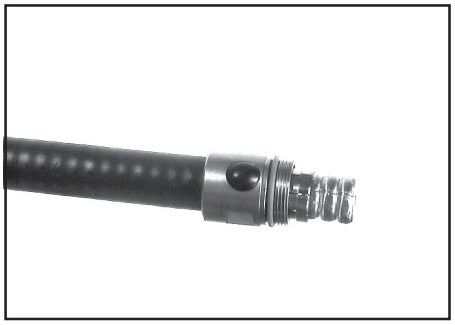

Push the rear of the connector onto the cable until it stops, pull the rear over the clamp and hold it still. Two and one half to three and one half corrugations should be visible past the clamp.

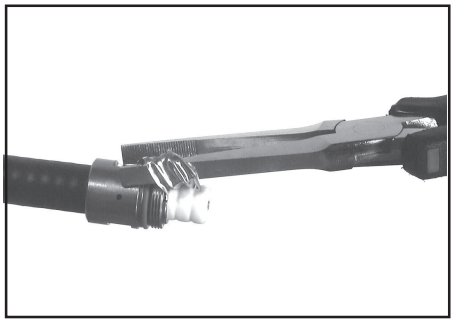

Using the flat nose pliers, grip the outer conductor and tear it so that it is flared out. Wrap it around the pliers nose (can opener method) to obtain a flared contact surface all around the cable.

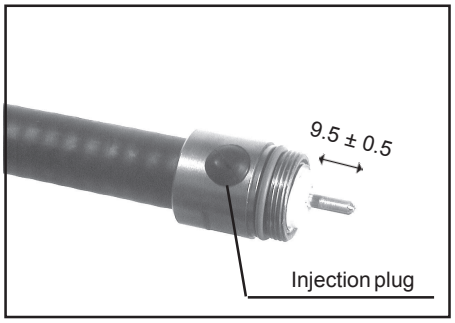

Use the knife to cut the dielectric in the first corrugation valley in front of the rear of the connector. Saw the center conductor at 9.5mm (3/8") ±0.5mm (±1/64") distance from the end of the dielectric. Use the file to chamfer the center conductor and clean it with the scouring pad. Remove all chips and clean the cable end. Apply a film of vaseline on the center conductor, being careful not to get any on the dielectric.

Screw the connector body onto the rear. Use the appropriate open end wrench to hold the body still and turn the rear onto it until it is tight with a torque of 20Nm (14.5 lb-ft). Remove the black injection plug from the

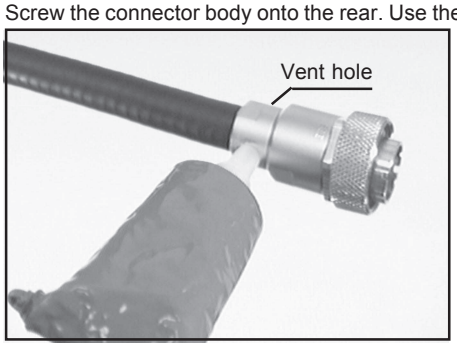

sealant port in the rear of the connector. Attach the brass adaptor to the sealant tube and to the sealant port. Using the key, inject sealant until it begins to come out of the small vent hole on the opposite side. Close the vent hole with your finger and continue injecting silicone until it is visible all around the back of the connector, between the connector and the cable jacket. Remove the adaptor from the connector. Replace the black injection plug in the injection port. Clean any excess sealant away with a rag. The sealant will be hard to the touch in about 1 hour.

KABELWERK EUPEN AG
Malmedyer Strasse 9 **B-4700 Eupen, Belgien**
Tel : +32-87-597 000 Fax : +32-87-597 100

NOTICE

KABELWERK EUPEN AG disclaims any liability or responsability for the results of improper or unsafe installation practices.

SPTC 50 AV 1/2"
INSTRUCTIONS D'UTILISATION

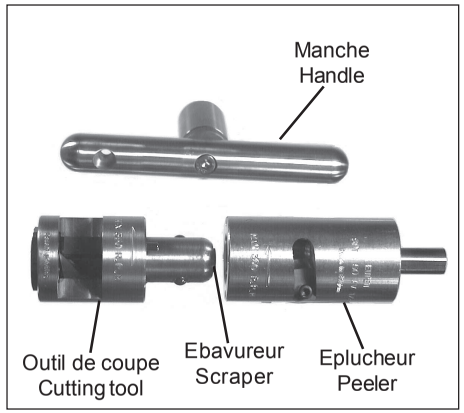

Types de cables
Eupen EC4-50 (5128) ; Andrew LDF4-50A ; Kabelmetal / RFS LCF 1/2" Cu2Y
Types de connecteurs
C **...** A12E Etanchéité par injection de silicone.
C **...** V12E Etanchéité par joint torique.
... : EIA78, 716M, 716F, NM50, NF50.
Attention : L'utilisation de l'outil nécessite le port de gants de travail et de lunettes de protection.
Description et préliminaires
L'outil SPTC 50 AV 1/2" est composé d'un éplucheur, d'un outil de coupe et d'un ébavureur. Il est conseillé d'entrainer l'outil par une visseuse électrique à batterie (≥14V, 2Ah, 350 rpm), si on ne dispose pas d'une visseuse, utilisez le manche.

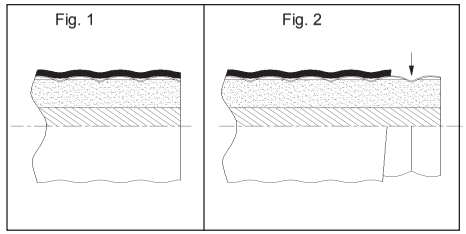

Important ! Sciez droit l'extrémité du câble, dans un creux du conducteur extérieur (fig.1). On peut enlever la gaine sur une petite longueur pour repérer plus précisément le creux (fig.2).

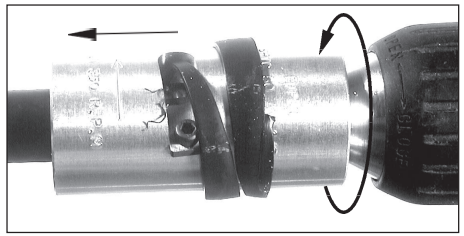

Epluchage
Glissez l'éplucheur sur l'extrémité du câble préparé. Actionnez la visseuse et poussez légérement : l'outil épluchera la gaine.

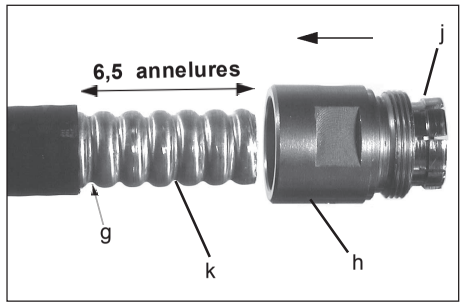

Préparation du conducteur extérieur
Retirez l'éplucheur du câble et contrôlez que la gaine s'arrête au-delà du sixième creux (g).
Glissez l'arrière (h) du connecteur sur le câble préparé (dans le cas de connecteur à étanchéité o-ring placez d'abord l'o-ring dans le sixième creux) et tirez l'arrière pour que la ferrule (j) se place dans le troisième creux (k).

SPTC 50 AV 1/2"
INSTRUCTIONS FOR USE

Cables types
Eupen EC4-50 (5128) ; Andrew LDF4-50A ; Kabelmetal / RFS LCF 1/2" Cu 2Y
Connectors types
C **...** A12E Elastomer injection watertightness.
C **...** V12E O-ring gasket watertightness.
... : EIA78, 716M, 716F, NM50, NF50.
Attention : The use of the tool requires working gloves and goggles.
Description and preliminaries
The SPTC 50 AV 1/2" tool is made up of a peeler, a cutting tool and a scraper. It is driven by a cordless driver drill (≥ 14V, 2Ah, 350 rpm).
Use the handle if a cordless driver drill is not available.

Important ! Make a square cut at the end of the cable in an outer conductor valley (fig.1). A short length of jacket can be removed to locate precisely the valley (fig.2).

Peeling
Slide the peeler on the prepared cable end. Run the drill and push gently : the tool is peeling the jacket.

Outer conductor preparation
Remove the peeler from the cable and make sure that the jacket stops beyond the sixth valley (g).
Slide the rear (h) of the connector onto the prepared cable (in case of o-ring watertighting connectors place first the o-ring in the sixth valley) and pull it until the clamp (j) is lodged in the third valley (k).

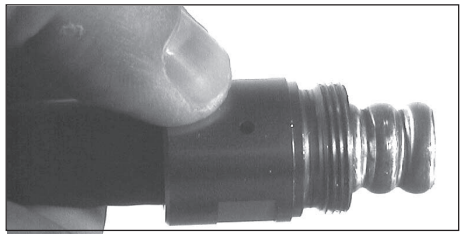

Poussez l'arrière sur la ferrule et maintenez-le. Deux annelures et demi doivent être visibles devant la ferrule.

Push the rear over the clamp and hold it still. Two an a half corrugations must be visible past the clamp.

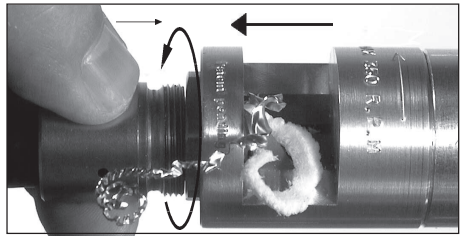

Glissez l'outil de coupe (préalablement inséré dans l'éplucheur) sur l'extrémité du câble, actionnez la visseuse et poussez légèrement. Quand l'avant de l'outil est contre l'arrière du connecteur, il le pousse et se place au-dessus de la ferrule.
L'outil coupe le conducteur extérieur et le diélectrique en même temps. L'opération est terminée lorsque l'outil n'enlève plus de matière.

Slide the cutting tool (previously inserted into the peeler) on the cable end, run the drill and push gently. When the front of the tool is against the rear of the connector, the rear is pushed by the front of the tool who will cover the clamp.
The cutting tool cut the outer conductor and the dielectric in the same time. Proceed until no more materials can be removed.

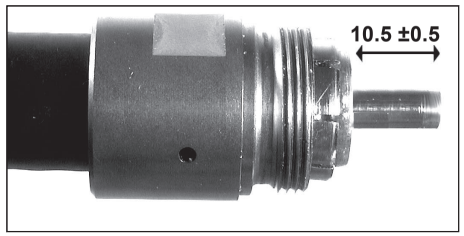

Retirez l'outil de coupe et controlez que le conducteur central est coupé à 10.5mm ± 0.5 mm du diélectrique.

Remove the cutting tool from the peeler and chek if the center conductor has 10.5mm ± 0.5mm length from the dielectric.

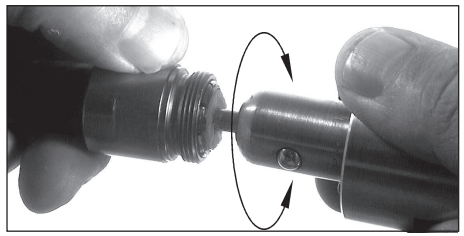

Ebavurez l'extrémité du conducteur central.

Maintenant le câble est préparé !
Pour terminer le montage du connecteur, consultez ses instructions d'installation.

Après chaque préparation complète, nettoyer l'outil (éplucheur, outil de coupe et ébavureur).

Use the scraper to deburr the center conductor.

The cable is prepared now !
To finish the connector installation, consult its installation instructions.

After each full cable preparation, clean the tool (peeler, cutting tool ans scraper).

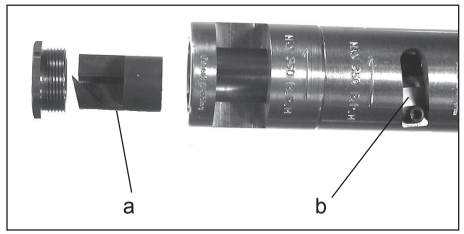

Code de l'outil et des pièces de rechange :
CSPTC50AV12E
a - 06 3267 07
b - 06 2690 08

Order code for the tool and replacement parts :
CSPTC50AV12E
a- 06 3267 07
b - 06 2690 08

KABELWERK EUPEN AG
Malmedyer Strasse 9 **B-4700 Eupen, Belgien**
Tel : +32-87-597 000 Fax : +32-87-597 100

AVIS

KABELWERK EUPEN AG décline toute responsabilité en cas de non respect de ces instructions.

NOTICE

KABELWERK EUPEN AG disclaims any liability or responsability for the results of improper or unsafe installation practices.

INSTALLATION INSTRUCTIONS

E0019/ Rev 02 Date : 04/11/1998

KABELWERK EUPEN AG
CABLERIE D'EUPEN S.A.
KABELFABRIEK EUPEN N.V.

N, 7/16 and EIA 7/8" connectors with O-ring watertighting for 7/8" corrugated cables

RECOMMENDED TOOLS AND ACCESSORIES

Hack saw (fine toothed blade), sharp knife, flat nose pliers, nonmetallic scouring pad, 3M Scotchfil, cleaning rags.

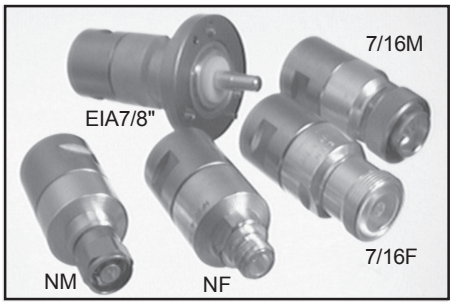

Open end wrenches:

EIA 7/8"	2x 30mm + 2x 10mm
7/16M	2x 30mm
7/16F	2x 30mm
NM	1x 30mm + 1x 19mm
NF	1x 30mm + 1x 19mm
7/16M coupling nut	1x 27mm

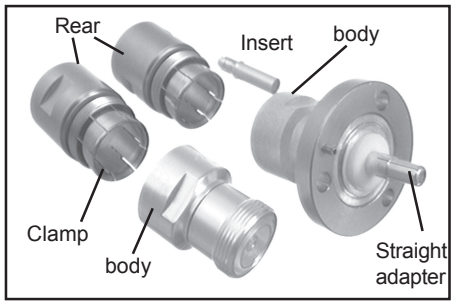

CABLE PREPARATION AND CONNECTOR MOUNTING

Make a square cut at the end of the cable with the hack saw.

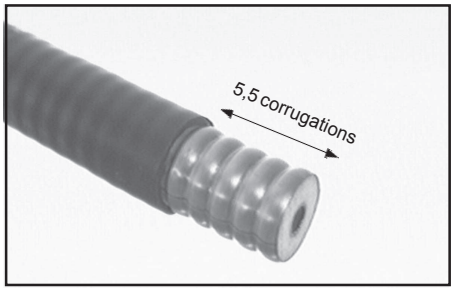

Cut and remove the jacket after the fifth complete corrugation. The jacket end must be at the top of a corrugation.

Clean the outer conductor with the scouring pad. Place the O-ring gasket close to the jacket.

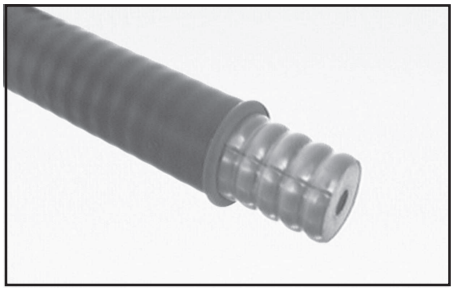

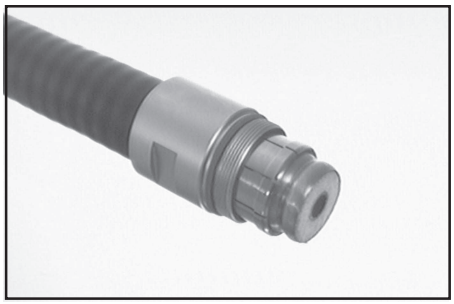

Push the rear of the connector onto the cable until it stops, pull the rear over the clamp and hold it still. One and one half to two and one half corrugations should be visible past the clamp.

Using the flat nose pliers, grip the outer conductor and tear it so that it is flared out. Wrap it around the pliers nose (can opener method) to obtain a flared contact surface all around the cable.

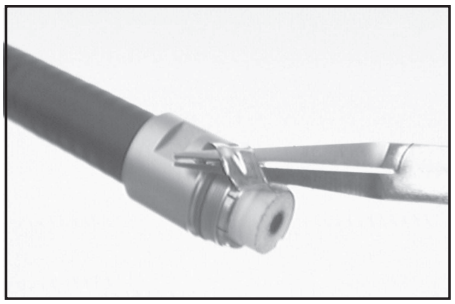

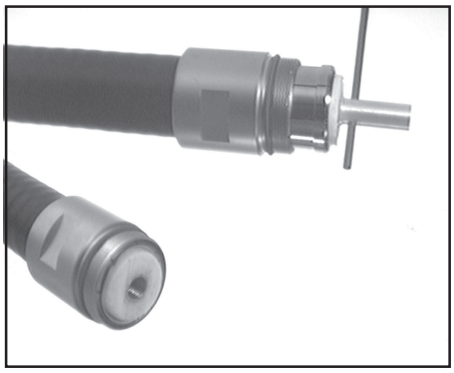

Use the knife to cut the dielectric in the first corrugation valley in front of the rear of the connector. Use the hack saw to cut the center conductor at the front end of the dielectric. Use the knife to deburr the inside surface of the center conductor. Press the 3M Scotchfil on the front end of the center conductor and the dielectric to remove all chips and clean the cable end.

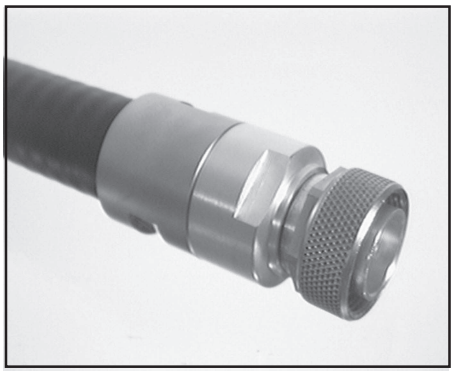

Push the rubber ball about 20mm (3/4") into the center conductor to provide a seal. For the EIA 7/8" connector, screw the insert into the center conductor until it stops. Screw the connector body onto the rear. Use the 30mm open end wrench to hold the body still and turn the rear onto it until it is tight with a torque of 30Nm (22 lb-ft).

KABELWERK EUPEN AG
Malmedyer Strasse 9 **B-4700 Eupen, Belgien**
Tel : +32-87-597 000 Fax : +32-87-597 100

NOTICE

KABELWERK EUPEN AG disclaims any liability or responsability for the results of improper or unsafe installation practices.

INSTALLATION INSTRUCTIONS

E0003 / Rev 03 Date : 04/11/1998

KABELWERK EUPEN AG
CABLERIE D'EUPEN S.A.
KABELFABRIEK EUPEN N.V.

N, 7/16 and EIA 7/8" connectors for 7/8" corrugated cables

RECOMMENDED TOOLS AND ACCESSORIES

Hack saw (fine toothed blade), sharp knife, flat nose pliers, nonmetallic scouring pad, Dow Corning 744 Silicone Sealant (one 90ml tube per 13 connectors), 3M Scotchfil, cleaning rags.

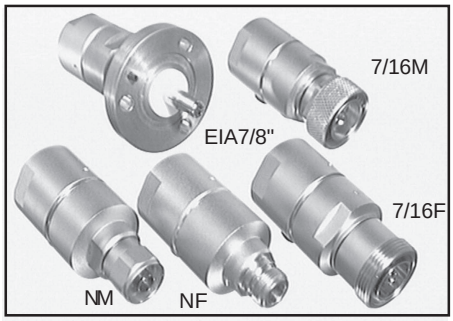

Open end wrenches:

EIA 7/8"	2x 30mm + 2x 10mm
7/16M	2x 30mm
7/16F	2x 30mm
NM	1x 30mm + 1x 19mm
NF	1x 30mm + 1x 19mm
7/16M coupling nut	1x 27mm

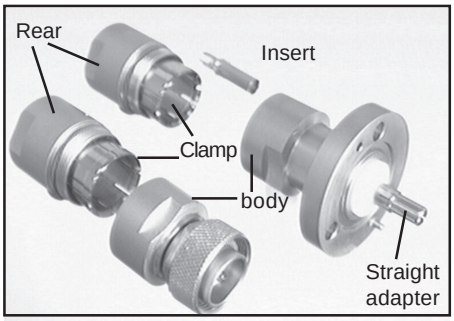

CABLE PREPARATION AND CONNECTOR MOUNTING

Make a square cut at the end of the cable with the hack saw.

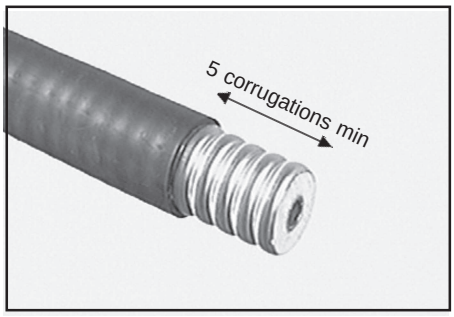

Cut and remove the jacket in the valley after the fifth complete corrugation. Clean the outer conductor with the scouring pad.

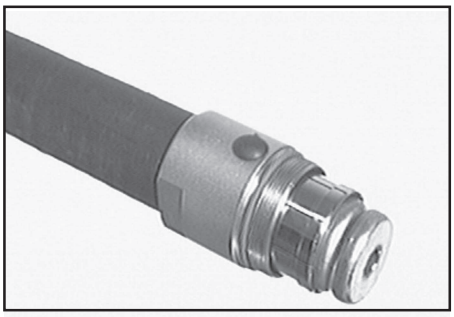

Push the rear of the connector onto the cable until it stops, pull the rear over the clamp and hold it still. One and one half to two and one half corrugations should be visible past the clamp.

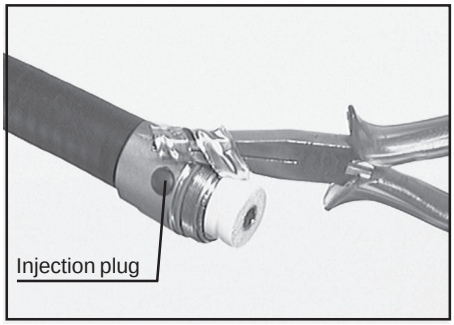

Using the flat nose pliers, grip the outer conductor and tear it so that it is flared out. Wrap it around the pliers nose (can opener method) to obtain a flared contact surface all around the cable.

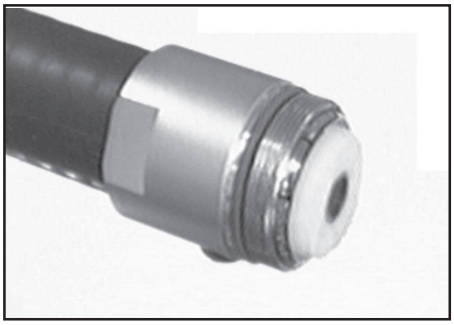

Use the knife to cut the dielectric in the first corrugation valley in front of the rear of the connector. Use the hack saw to cut the center conductor at the front end of the dielectric. Use the knife to deburr the inside surface of the center conductor. Press the 3M Scotchfil on the front end of the center conductor and the dielectric to remove all chips until the cable end is clean.

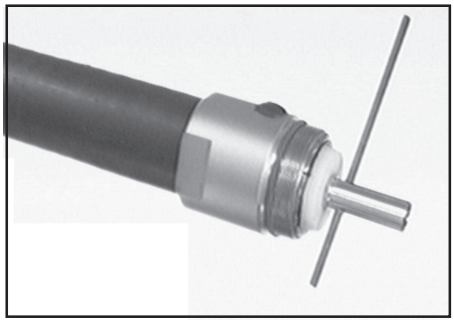

Push the rubber ball about 20mm (3/4") into the center conductor to provide a seal. For the EIA 7/8" connector, screw the insert into the center conductor until it stops. Screw the connector body onto the rear. Use the open end wrench to hold the connector body still and turn the rear onto it until it is tight with a torque of 30Nm (22 lb-ft).

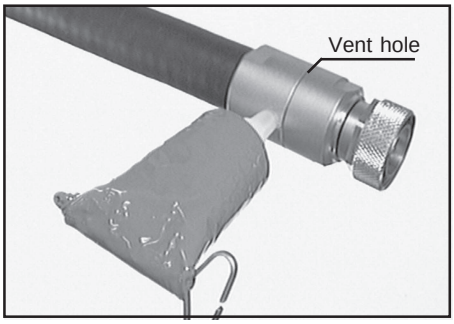

Remove the black injection plug from the sealant port in the rear of the connector. Attach the brass adaptor to the sealant tube and to the sealant port. Using the key, inject sealant until it begins to come out of the small vent hole on the opposite side. Close the vent hole with your finger and continue injecting silicone until it is visible all around the back of the connector, between the connector and the cable jacket. Remove the adaptor from the connector. Replace the black injection plug in the injection port. Clean any excess sealant away with a rag. The sealant will be hard to the touch in about 1 hour.

KABELWERK EUPEN AG
Malmedyer Strasse 9 **B-4700 Eupen, Belgien**
Tel : +32-87-597 000 Fax : +32-87-597 100

NOTICE

KABELWERK EUPEN AG disclaims any liability or responsability for the results of improper or unsafe installation practices.

SPTC 50 AV 7/8
INSTRUCTIONS D'UTILISATION

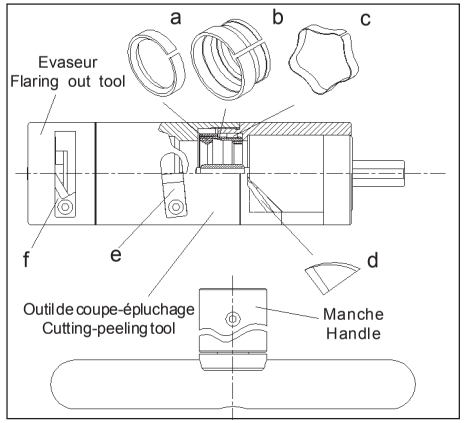

Types de cables
Eupen 5228 ; Andrew LDF5-50A ; Kabelmetal LCF 7/8"
Types de connecteurs
C ... A78E Etanchéité par injection de silicone.
C ... V78E Etanchéité par joint torique.
... ; EIA78, 716M, 716F, NM50, NF50.
Attention : L'utilisation de l'outil nécessite le port de gants de travail et de lunettes de protection.
Description et préliminaires
L'outil SPTC 50 AV 7/8" est composé d'un outil de coupe-épluchage et d'un évaseur.
Il est entrainé par une visseuse électrique puissante à batterie(14V, 2Ah, 150 rpm). Si on ne dispose pas d'une visseuse, utilisez le manche

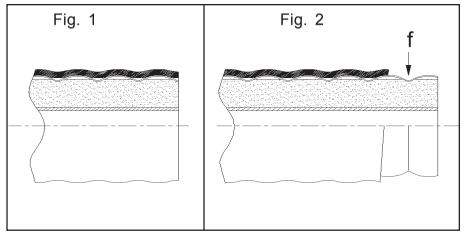

Important ! Sciez droit l'éxtremité du câble dans un creux du conducteur extérieur (fig.1). On peut enlever la gaine sur une petite longueur pour repérer plus précisément le creux (f, fig.2).

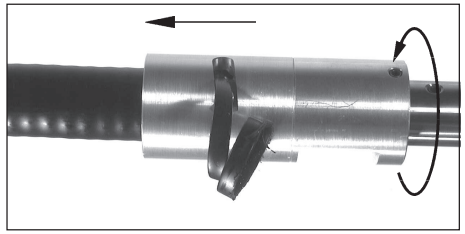

Coupe et epluchage
Glissez l'outil de coupe-épluchage sur l'extrémité du câble préparé. Actionnez la visseuse et poussez légèrement : l'outil épluchera la gaine.

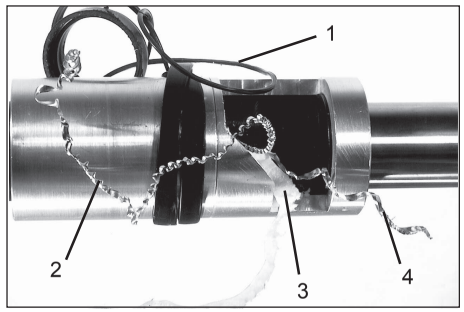

Lorsque vous sentez une résistance, continuez à tourner en poussant fermement : l'outil coupe la gaine (1), le conducteur extérieur (2), le diélectrique (3) et le conducteur central (4) en même temps. Continuez jusqu'à ce que l'outil ne coupe plus de matière.

SPTC 50 AV 7/8
INSTRUCTIONS FOR USE

Cables types
Eupen 5228 ; Andrew LDF5-50A ; Kabelmetal LCF 7/8"
Connectors types
C ... A78E Etanchéité par joint de silicone.
C ... V78E Etanchéité par joint torique.
... ; EIA78, 716M, 716F, NM50, NF50.
Attention : The use of the tool requires working gloves and goggles.
Description and preliminaries
The SPTC 50 AV 7/8" tool is made up of a cutting-peeling tool and of a flaring out tool.
It is driven by a powerful cordless driver drill (14V, 2Ah, 150 rpm).
Use the handle if a cordless driver drill is not available.

Important ! Make a square cut at the end of the cable in an outer conductor valley (fig.1). A short length of jacket can be removed to locate precisely the valley (f, fig.2).

Cutting and peeling
Slide the cutting-peeling tool on the prepared cable end. Run the drill and push gently : the tool is peeling the jacket.

When you feel some resistance, keep on turning and pushing firmly : the tool is cutting the jacket (1), the outer conductor (2), the dielectric (3) and the center conductor (4) at the same time. Go on until no more materials can be removed.

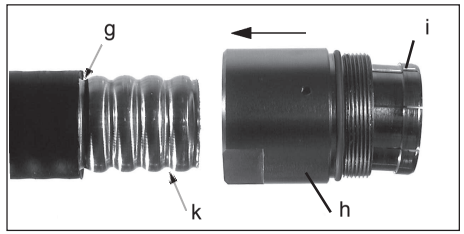

Préparation du conducteur extérieur
Retirez l'outil de coupe-épluchage du câble et contrôlez que quatre annelures complètes soit dénudées, que le conducteur extérieur, le diélectrique et le conducteur central sont coupés dans un creux.
Glissez l'arrière (h) du connecteur sur le câble préparé (placez d'abord l'o-ring dans le quatrième creux dans le cas de connecteurs à étanchéité o-ring) et tirez l'arrière pour que la ferrule (i) se place dans le premier creux (k).

Outer conductor preparation
Remove the cutting-peeling tool from the cable and make sure that four complete corrugations are stripped, that the outer conductor, the dielectric and the center conductor are cutted in a valley.
Slide the rear (h) of a connector onto the prepared cable (place first the o-ring in the fourth valley (i) in case of o-ring watertighting connectors) and pull it until the clamp is lodged in the first valley (k).

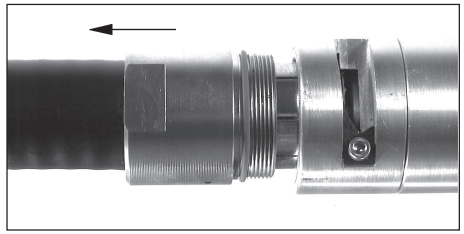

Reculez l'arrière et glissez l'évaseur (préalablement inséré dans l'outil de coupe-épluchage) sur la ferrule jusqu'à ce que la pointe du couteau soit prés du conducteur extérieur **sans le toucher**.

Pull the rear away and slide the flaring out tool (previously inserted into the cutting-peeling tool) onto the clamp until the blade is close by the outer conductor **without touching it**.

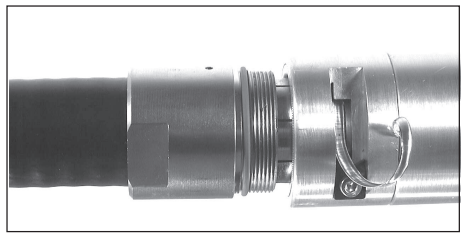

Actionnez la visseuse et poussez pour couper le conducteur extérieur. Continuez jusqu'à ce que l'évaseur ne coupe plus.

Run the drill and push it to cut the outer conductor. Proceed until no more material can be removed.

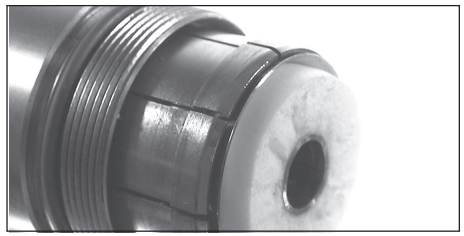

Retirez l'évaseur et nettoyez l'extrémité du câble. Le câble est maintenant préparé.
Pour terminer le montage du connecteur, consultez ses instructions d'installation.
Après chaque préparation complète, nettoyez l'outil (outil de coupe-épluchage + évaseur).

Remove the flaring out tool and clean the cable end. Now the cable is prepared.
To finish the connector installation, consult its installation instructions.
After each full cable preparation, clean the tool (cutting-peeling tool + flaring out tool).

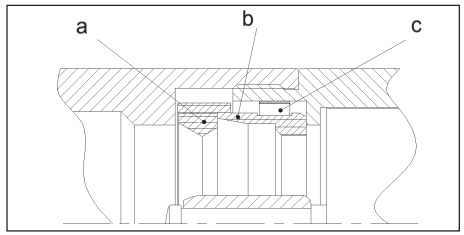

Code de l'outil et des pièces de rechange :
CSPTC50AV78E
a - 06 3326 00 **d** - 06 2690 41
b - 06 3327 00 **e** - 06 2690 04
c - 06 3328 00 **f** - 06 2690 11
Soyez attentif à la position de la pièce **a** dans la pièce **b**.

Order code for the tool and replacement parts :
CSPTC50AV78E
a - 06 3326 00 **d** - 06 2690 41
b - 06 3327 00 **e** - 06 2690 04
c - 06 3328 00 **f** - 06 2690 11
Pay attention to the position of the part **a** in the part **b**.

KABELWERK EUPEN AG
Malmedyer Strasse 9 **B-4700 Eupen, Belgien**
Tel : +32-87-597 000 Fax : +32-87-597 100

AVIS
KABELWERK EUPEN AG décline toute responsabilité en cas de non respect de ces instructions.

NOTICE
KABELWERK EUPEN AG disclaims any liability or responsability for the results of improper or unsafe installation practices.

INSTALLATION INSTRUCTIONS

E0014 / Rev 06 Date : 31/03/2000

KABELWERK EUPEN AG
CABLERIE D'EUPEN S.A.
KABELFABRIEK EUPEN N.V.

N, 7/16 and EIA 7/8" connectors with O-ring watertighting for 1-1/4" corrugated cables

RECOMMENDED TOOLS AND ACCESSORIES

Hack saw (fine toothed blade), sharp knife, flat nose pliers, nonmetallic scouring pad, 3mm hex key, 2 hook spanners (35-50mm) or 1-11/16" open end wrenches, 1-1/4" Saw Guide, 3M Scotchfil, cleaning rags.

Open end wrenches :

EIA 7/8"	1x 30mm
	+ 2x 10mm (Attaching screw)
7/16M	1x 30mm
7/16F	1x 30mm
NM	1x 19mm
NF	1x 19mm
7/16M coupling nut	1x 27mm

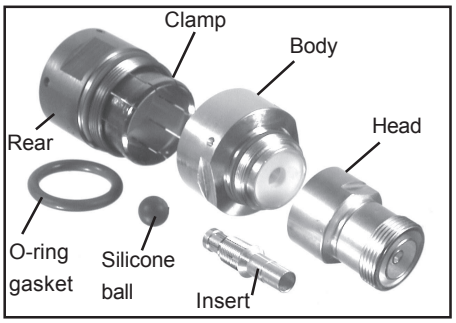

CABLE PREPARATION AND CONNECTOR MOUNTING

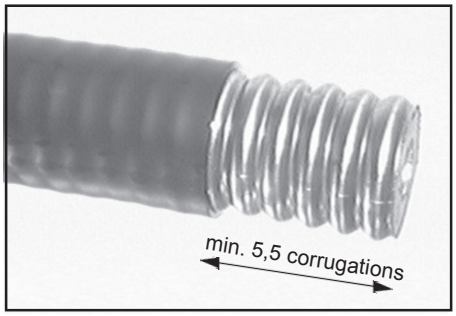

Make a square cut at the end of the cable with the hack saw.
Cut and remove the jacket after the fifth complete corrugation. The jacket end must be at the top of a corrugation.

Clean the outer conductor with the scouring pad. Place the O-ring gasket close to the jacket.

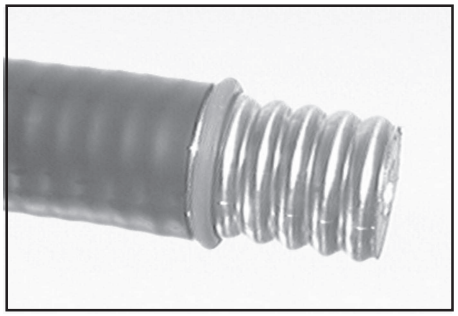

Push the rear of the connector onto the cable until it stops, pull the rear over the clamp and hold it still. One and one half to two and one half corrugations should be visible past the clamp. Using the flat nose pliers, grip the outer conductor and tear it so that it is flared out. Wrap it around the pliers nose (can opener method) to obtain a flared contact surface all around the cable.

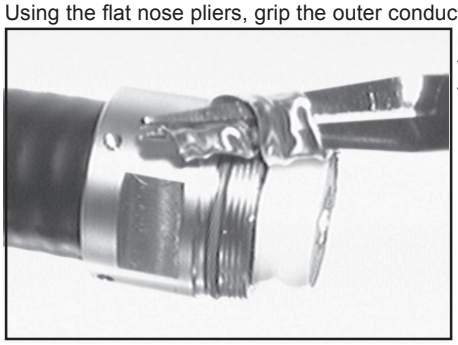

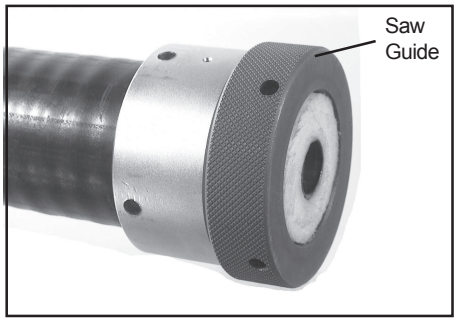

Screw the Saw Guide on the rear and tighten it; cut the dielectric immediately in front of the Saw Guide using a cutter blade. Remove the dielectric and saw the center conductor in the same plane. Use the knife to deburr the inside surface of the center conductor. Press the 3M Scotchfil on the front end of the center conductor and the dielectric to remove all chips. Repeat the process until the cable end is clean. Unscrew the Saw Guide. Push the silicone ball about 38mm (1"1/2) into the center conductor to provide a seal. Push the insert into the center conductor until it stops.

Screw the connector body onto the rear. Tighten the rear on the body with a torque of 50Nm (37lb-ft) maximum.
Tighten the Allen screw inside the insert. The front of the insert and the front of the body should be in a same plane (acceptable tolerance: ± 0.2mm).

Tighten the connector head onto the body with a torque of 30Nm (22lb-ft) maximum.

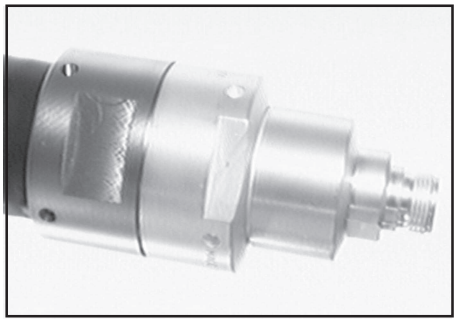

KABELWERK EUPEN AG
Malmedyer Strasse 9 **B-4700 Eupen, Belgien**
Tel : +32-87-597 000 Fax : +32-87-597 100

NOTICE

KABELWERK EUPEN AG disclaims any liability or responsability for the results of improper or unsafe installation practices.

INSTALLATION INSTRUCTIONS

E0004 / Rev 07 Date : 30/03/2000

KABELWERK EUPEN AG
CABLERIE D'EUPEN S.A.
KABELFABRIEK EUPEN N.V.

N, 7/16 and EIA 7/8" connectors for 1-1/4" corrugated cables

RECOMMENDED TOOLS AND ACCESSORIES

Hack saw (fine toothed blade), sharp knife, flat nose pliers, non-metallic scouring pad, 3mm hex key, 2 hook spanners (35-50mm) or 1-11/16" open end wrenches. Dow Corning 744 Silicone sealant (one 90 ml tube per 5 connectors), 1-1/4" Saw Guide, 3M Scotchfil, cleaning rags.

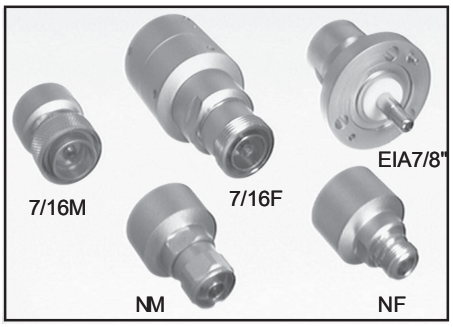

Open end wrenches :

EIA 7/8"	1x 30mm
	+ 2x 10mm (Attaching screw)
7/16M	1x 30mm
7/16F	1x 30mm
NM	1x 19mm
NF	1x 19mm
7/16M coupling nut	1x 27mm

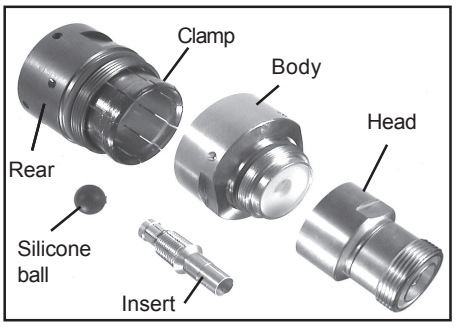

CABLE PREPARATION AND CONNECTOR MOUNTING

Make a square cut at the end of the cable with the hack saw.

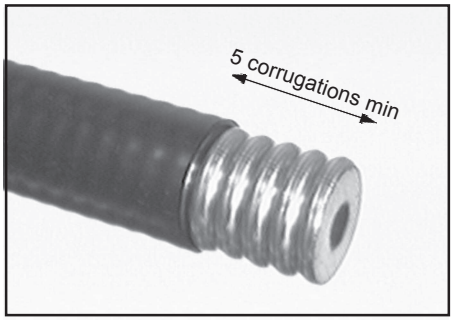

Cut and remove the jacket in the valley after the fifth complete corrugation. Clean the outer conductor with the scouring pad.

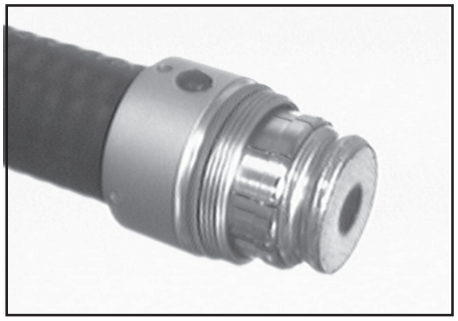

Push the rear of the connector onto the cable until it stops, pull the rear over the clamp and hold it still. One and one half to two and one half corrugations should be visible past the clamp.

Using the flat nose pliers, grip the outer conductor and tear it so that it is flared out. Wrap it around the pliers nose (can opener method) to obtain a flared contact surface all around the cable.

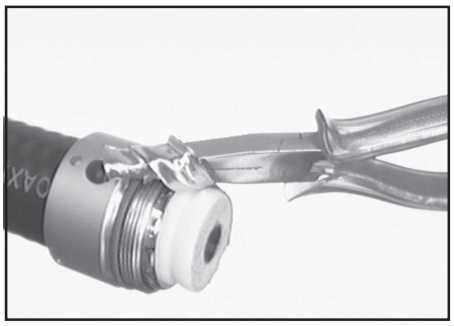

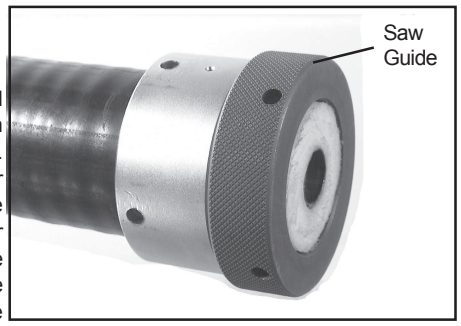

Screw the Saw Guide on the rear and tighten it; cut the dielectric immediately in front of the Saw Guide using a cutter blade. Remove the dielectric and saw the center conductor in the same plane. Use the knife to deburr the inside surface of the center conductor. Press the 3M Scotchfil on the front end of the center conductor and the dielectric to remove all chips. Repeat the process until the cable end is clean. Unscrew the Saw Guide. Push the silicone ball about 38mm (1"1/2) into the center conductor to provide a seal. Push the insert into the center conductor until it stops.

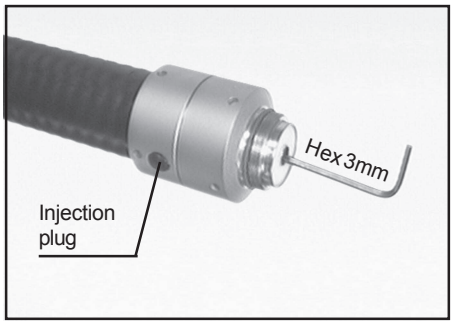

Screw the connector body onto the rear. Tighten the rear on the body with a torque of 50Nm (36.6lb-ft) maximum. Tighten the Allen screw inside the insert. The front of the insert and the front of the body should be in a same plane (acceptable tolerance: ± 0.2mm). Tighten the connector head onto the body with a torque of about 30Nm.

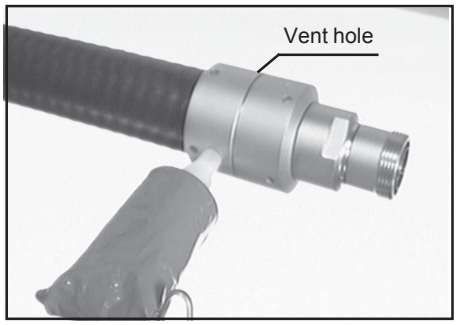

Remove the black injection plug from the sealant port in the rear of the connector. Attach the brass adaptator to the sealant port. Using the key, inject sealant until it begins to come out of the small vent hole on the opposite side. Close the vent hole with your finger and continue injecting silicone until it is visible all around the back of the connector, between the connector and the cable jacket. Remove the adaptator from the connector. Replace the black injection plug in the injection port. Clean any excess sealant away with a rag. The sealant will be hard to the touch in about one hour.

NOTICE

KABELWERK EUPEN AG disclaims any liability or responsability for the results of improper or unsafe installation practices.

KABELWERK EUPEN AG
Malmedyer Straβe 9 **B-4700 Eupen, Belgien**
Tel :+32-87-597 000 Fax : +32-87-797 100

SPTC 50 AV 1" 1/4
INSTRUCTIONS D'UTILISATION

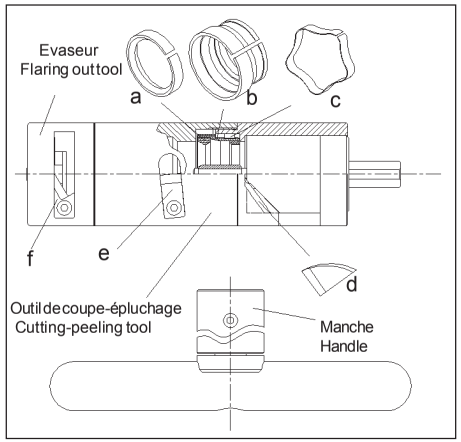

Types de cables
Eupen EC6-50 (5328) ; Andrew LDF6-50A ; Kabelmetal / RFS LCF 1-1/4" Cu 2Y-50
Types de connecteurs
C **...** B114E Etanchéité par injection de silicone.
C **...** V114E Etanchéité par joint torique.
... : EIA78, EIA158, 716M, 716F, NM50, NF50.

Attention : L'utilisation de l'outil nécessite le port de gants de travail et de lunettes de protection.
Description et préliminaires
L'outil SPTC 50 AV 1" 1/4 est composé d'un outil de coupe-épluchage et d'un évaseur. Il est entraîné par une visseuse électrique puissante à batterie (≥14V, 2Ah, 150 rpm).
Si on ne dispose pas d'une visseuse, utilisez le manche.

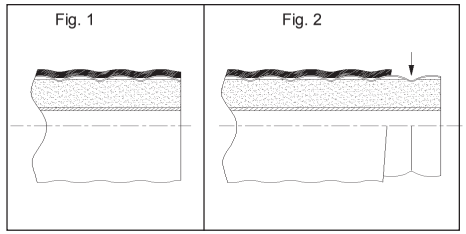

Important ! Sciez droit l'extrémité du câble, dans un creux du conducteur extérieur (fig.1). On peut enlever la gaine sur une petite longueur pour repérer plus précisément le creux (fig.2).

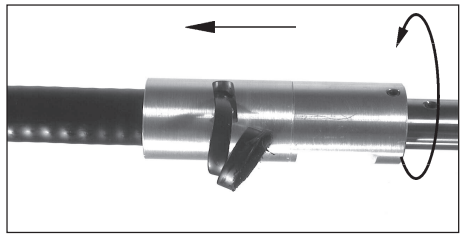

Coupe et Epluchage
Glissez l'outil de coupe-épluchage sur l'extrémité du câble préparé. Actionnez la visseuse et poussez légèrement : l'outil épluchera la gaine.

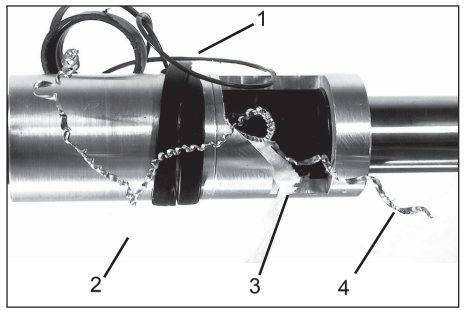

Lorsque vous sentez une résistance, continuez à tourner en poussant fermement : l'outil coupe la gaine (1), le conducteur extérieur (2), le diélectrique (3) et le conducteur central (4) en même temps. Insistez jusqu'à ce que l'outil ne coupe plus de matière.

SPTC 50 AV 1" 1/4
INSTRUCTIONS FOR USE

Cables types
Eupen EC6-50 (5328) ; Andrew LDF6-50A ; Kabelmetal / RFS LCF 1-1/4" Cu 2Y-50
Connectors types
C **...** B114E Elastomer injection watertightness.
C **...** V114E O-ring gasket watertightness.
... : EIA78, EIA158, 716M, 716F, NM50, NF50.

Attention : The use of the tool requires working gloves and goggles.
Description and preliminaries
The SPTC 50 AV 1" 1/4 tool is made up of a cutting-peeling tool and of a flaring out tool. It is driven by a powerful cordless driver drill (≥ 14V, 2Ah, 150 rpm).
Use the handle if a cordless driver drill is not available.

Important ! Make a square cut at the end of the cable in an outer conductor valley (fig.1). A short length of jacket can be removed to locate precisely the valley (fig.2).

Cutting and Peeling
Slide the cutting-peeling tool on the prepared cable end. Run the drill and push gently: the tool is peeling the jacket

When you feel some resistance, keep on turning and pushing firmly : the tool is cutting the jacket (1), the outer conductor (2), the dielectric (3) and the center conductor (4) at the same time. Insist until no more materials can be removed.

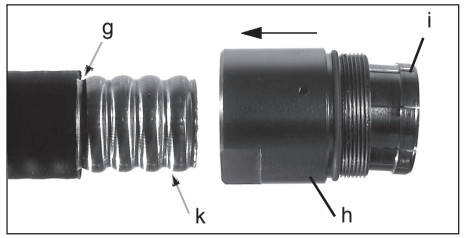

Préparation du conducteur extérieur
Retirez l'outil de coupe-épluchage du câble et contrôlez que quatre annelures et demie soit dénudées (g), que le conducteur extérieur, le diélectrique et le conducteur central sont coupés dans un creux.
Glissez l'arrière (h) du connecteur sur le câble préparé (placez d'abord l'o-ring dans le quatrième creux dans le cas de connecteurs à étanchéité o-ring) et tirez l'arrière pour que la ferrule (i) se place dans le premier creux (k).

Outer conductor preparation
Remove the cutting-peeling tool from the cable and make sure that four and a half corrugations are stripped (g) and the outer conductor, the dielectric and the center conductor cutted in a valley.
Slide the rear (h) of a connector onto the prepared cable (place first the o-ring in the fourth valley in case of o-ring watertighting connectors) and pull it until the clamp (i) is lodged in the first valley (k).

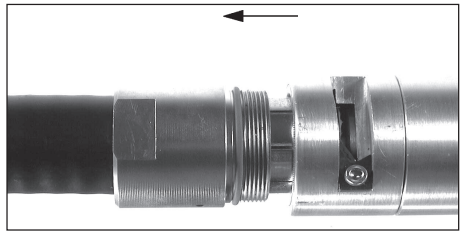

Reculez l'arrière et glissez l'évaseur (préalablement inséré dans l'outil de coupe-épluchage) sur la ferrule jusqu'à ce que la pointe du couteau soit près du conducteur extérieur **sans le toucher**.

Pull the rear away and slide the flaring out tool (previously inserted into the cutting-peeling tool) onto the clamp until the blade is close by the outer conductor **without touching it.**

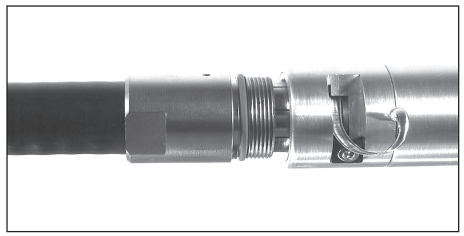

Actionnez la visseuse et poussez pour couper le conducteur extérieur. Continuez jusqu'à ce que l'évaseur ne coupe plus.

Run the drill and push it to cut the outer conductor. Proceed until no more material can be removed.

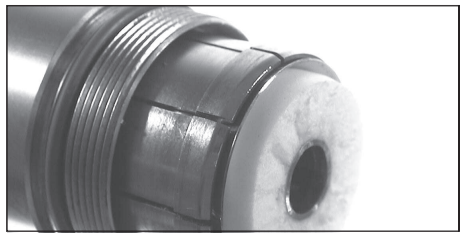

Retirez l'évaseur et nettoyez l'extrémité du câble. Le câble est maintenant préparé.
Pour terminer le montage du connecteur, consultez ses instructions d'installation.
Après chaque préparation complète, nettoyez l'outil (outil de coupe-épluchage + évaseur).

Remove the flaring out tool and clean the cable end. Now the cable is prepared.
To finish the connector installation, consult its installation instructions.
After each full cable preparation, clean the tool (cutting-peeling tool + flaring out tool).

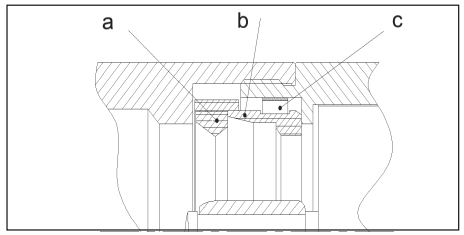

Code de l'outil et des pièces de rechange :
CSPTC50AV158E

a - 06 3326 01	**d** - 06 2690 42
b - 06 3327 01	**e** - 06 2690 06
c - 06 3328 01	**f** - 06 2690 12

Soyez attentif à la position de la pièce **a** dans la pièce **b**.

Order code for the tool and replacement parts :
CSPTC50AV158E

a - 06 3326 01	**d** - 06 2690 42
b - 06 3327 01	**e** - 06 2690 06
c - 06 3328 01	**f** - 06 2690 12

Pay attention to the position of the part **a** in the part **b**.

KABELWERK EUPEN AG
Malmedyer Strasse 9 **B-4700 Eupen, Belgien**
Tel : +32-87-597 000 Fax : +32-87-597 100

AVIS
KABELWERK EUPEN AG décline toute responsabilité en cas de non respect de ces instructions.

NOTICE
KABELWERK EUPEN AG disclaims any liability or responsability for the results of improper or unsafe installation practices.

INSTALLATION INSTRUCTIONS

E0001 / Rev 07 Date : 30/03/2000

KABELWERK EUPEN AG
CABLERIE D'EUPEN S.A.
KABELFABRIEK EUPEN N.V.

N, 7/16 and EIA 7/8" connectors for 1-5/8" corrugated cables

RECOMMENDED TOOLS AND ACCESSORIES

Hack saw (fine toothed blade), sharp knife, flat nose pliers, nonmetallic scouring pad, 3 mm Hex key, 2 hook spanners (50-80 mm) or 2-1/4" open end wrenches. Dow Corning 744 Silicone sealant (one 90ml tube per 5 connectors), 1-5/8" Saw Guide, 3M Scotchfil, cleaning rags.

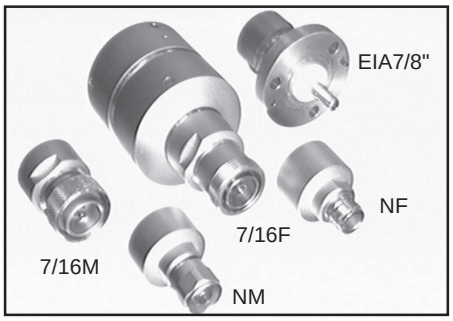

Open end wrenches :

EIA 7/8"	1x 30mm
	+ 2x 10mm (attaching screw)
7/16M	1x 30mm
7/16F	1x 30mm
NM	1x 19mm
NF	1x 19mm
7/16M coupling nut	1x 27mm

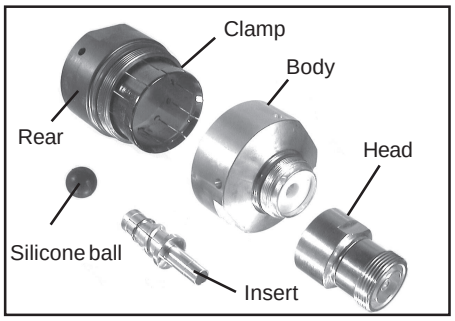

CABLE PREPARATION AND CONNECTOR MOUNTING

Make a square cut at the end of the cable with the hack saw.

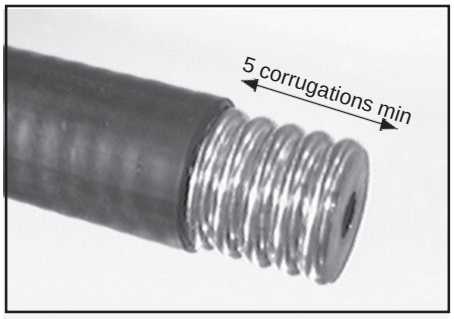

Cut and remove the jacket in the valley after the fifth complete corrugation. Clean the outer conductor with the scouring pad.

Push the rear of the connector onto the cable until it stops, pull the rear over the clamp and hold it still. One and one half to two and one half corrugations should be visible past the clamp.

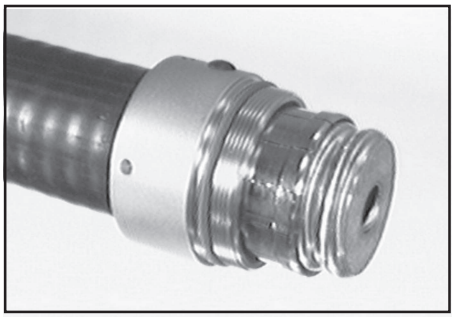

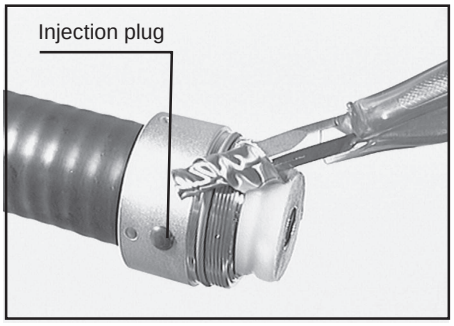

Using the flat nose pliers, grip the outer conductor and tear it so that it is flared out. Wrap it around the pliers nose (can opener method) to obtain a flared contact surface all around the cable.

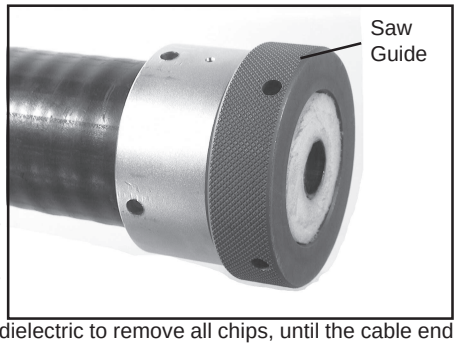

Screw the Saw Guide on the rear and tighten it; cut the dielectric immediately in front of the saw guide using a cutter blade. Remove the dielectric and saw the center conductor in the same plane. Use the knife to deburr the inside surface of the center conductor. Press the 3M Scotchfil on the front end of the center conductor and the dielectric to remove all chips, until the cable end is clean. Unscrew the Saw Guide. Push the silicone ball about 38mm (1"1/2) into the center conductor to provide a seal.

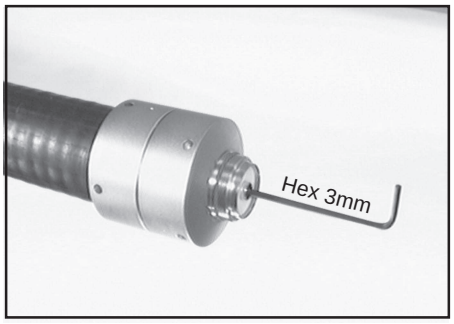

Screw the insert into the center conductor until it stops.

Screw the connector body onto the rear. Tighten the rear on the body with a torque of 50Nm (36.6lb-ft) maximum. Tighten the Allen screw inside the insert. The front of the body and the insert should be in a same plane (acceptable tolerance: ± 0.2mm). Thread the connector head onto the body and turn the head onto it until it is tigth with a torque of 30Nm (22lb-ft) maximum.

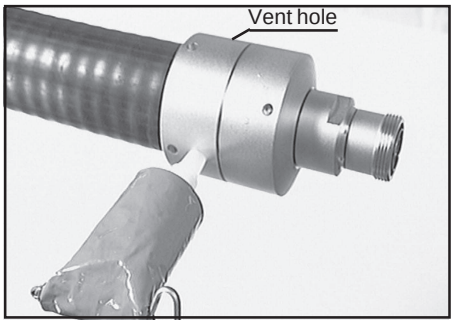

Remove the black injection plug from the sealant port in the rear of the connector. Attach the brass adaptor to the sealant tube and to the sealant port. Using the key, inject sealant until it begins to come out of the small vent hole on the opposite side. Close the vent hole with your finger and continue injecting silicone until it is visible all around the back of the connector, between the connector and the cable jacket. Remove the adaptor from the connector. Replace the black injection plug in the injection port. Clean any excess sealant away with a rag. The sealant will be hard to the touch in about one hour.

NOTICE

KABELWERK EUPEN AG disclaims any liability or responsability for the results of improper or unsafe installation practices.

KABELWERK EUPEN AG
Malmedyer Strasse 9 **B-4700 Eupen, Belgien**
Tel : +32-87-597 000 Fax : +32-87-597 100

INSTALLATION INSTRUCTIONS

E0013 / Rev 04 Date : 30/03/2000

KABELWERK EUPEN AG
CABLERIE D'EUPEN S.A.
KABELFABRIEK EUPEN N.V.

N, 7/16 and EIA 7/8" connectors with O-ring watertighting for 1-5/8" corrugated cables

RECOMMENDED TOOLS AND ACCESSORIES

Hack saw (fine toothed blade), sharp knife, flat nose pliers, nonmetallic scouring pad, 3 mm Hex key, 2 hook spanners (50-80 mm) or 2-1/4" open end wrenches, 1-5/8" Saw Guide, 3M Scotchfil, cleaning rags.

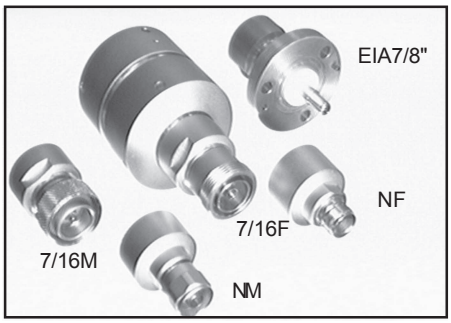

Open end wrenches :

EIA 7/8"	1x 30mm
	+ 2x 10mm (attaching screw)
7/16M	1x 30mm
7/16F	1x 30mm
NM	1x 19mm
NF	1x 19mm
7/16M coupling nut	1x 27mm

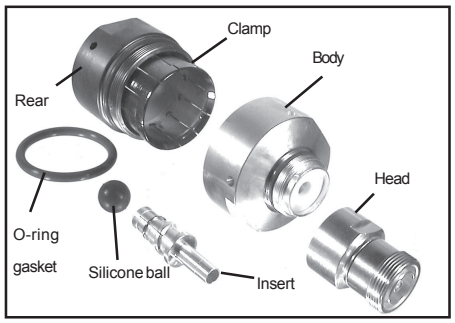

CABLE PREPARATION AND CONNECTOR MOUNTING

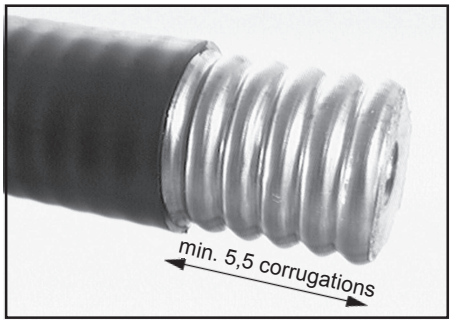

Make a square cut at the end of the cable with the hack saw.
Cut and remove the jacket after the fifth complete corrugation. The jacket end must be at the top of a corrugation.

Clean the outer conductor with the scouring pad. Place the O-ring gasket close to the jacket.

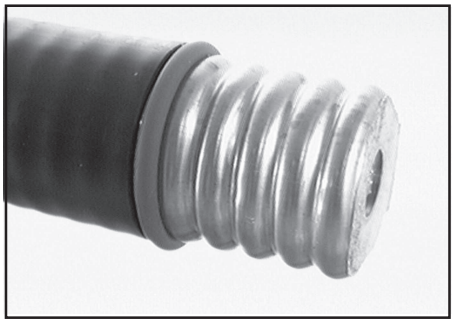

Push the rear of the connector onto the cable until it stops, pull the rear over the clamp and hold it still. One and one half to two and one half corrugations should be visible past the clamp.

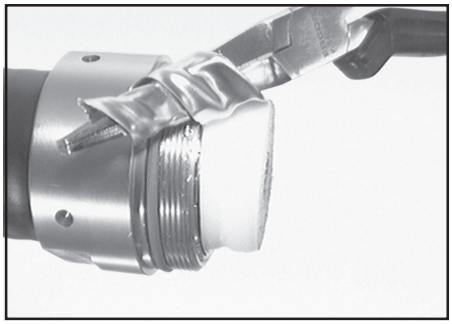

Using the flat nose pliers, grip the outer conductor and tear it so that it is flared out. Wrap it around the pliers nose (can opener method) to obtain a flared contact surface all around the cable.

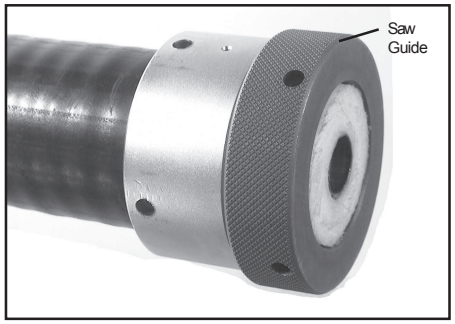

Screw the Saw Guide on the rear and tighten it; cut the dielectric immediately in front of the Saw Guide using a cutter blade. Remove the dielectric and saw the center conductor in the same plane. Use the knife to deburr the inside surface of the center conductor. Press the 3M Scotchfil on the front end of the center conductor and the dielectric to remove all chips. Repeat the process until the cable end is clean. Unscrew the Saw Guide.

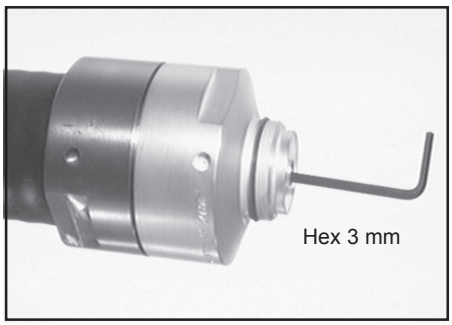

Push the silicone ball about 38mm (1"1/2) into the center conductor to provide a seal.
Screw the insert into the center conductor until it stops.
Screw the connector body onto the rear. Tighten the rear on the body with a torque of 50Nm (37lb-ft) maximum.
Tighten the Allen screw inside the insert. The front of the body and the insert should be in a same plane (acceptable tolerance: ±0.2mm).

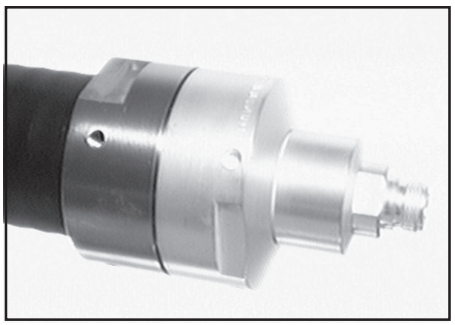

Thread the connector head onto the body and turn the head onto it until it is tight with a torque of 30Nm (22lb-ft) maximum.

KABELWERK EUPEN AG
Malmedyer Strasse 9 **B-4700 Eupen, Belgien**
Tel : +32-87-597 000 Fax : +32-87-597 100

NOTICE

KABELWERK EUPEN AG disclaims any liability or responsability for the results of improper or unsafe installation practices.

SPTC 50 AV 1" 5/8
INSTRUCTIONS D'UTILISATION

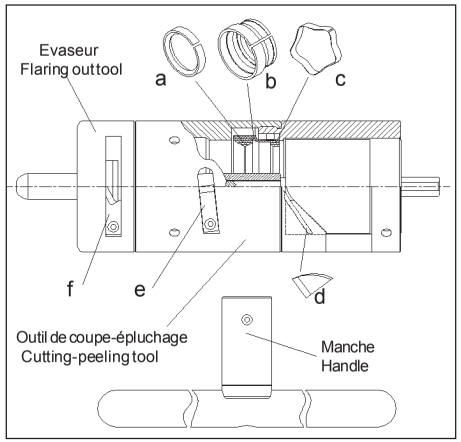

Types de cables
Eupen EC7-50 (5438) ; Andrew LDF7-50A ; Kabelmetal / RFS LCF 1-5/8" Cu 2Y-50

Types de connecteurs
C **...** A158E Etanchéité par injection de silicone.
C **...** V158E Etanchéité par joint torique.
... : EIA78, EIA158, 716M, 716F, NM50, NF50.

Attention : L'utilisation de l'outil nécessite le port de gants de travail et de lunettes de protection.

Description et préliminaires
L'outil SPTC 50 AV 1" 5/8 est composé d'un outil de coupe-épluchage et d'un évaseur. Il est entraîné par une visseuse électrique puissante à batterie (≥18V, 2.2Ah, 150 rpm).
Si on ne dispose pas d'une visseuse, utilisez le manche.

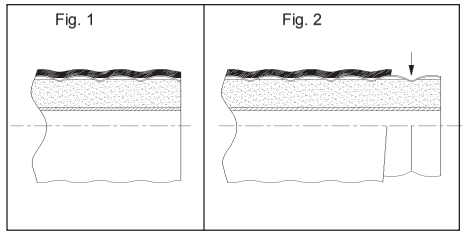

Important ! Sciez droit l'extrémité du câble, dans un creux du conducteur extérieur (fig.1). On peut enlever la gaine sur une petite longueur pour repérer plus précisément le creux (fig.2).

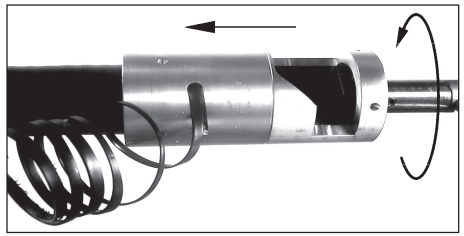

Coupe et Epluchage
Glissez l'outil de coupe-épluchage sur l'extrémité du câble préparé. Actionnez la visseuse et poussez légèrement : l'outil épluchera la gaine.

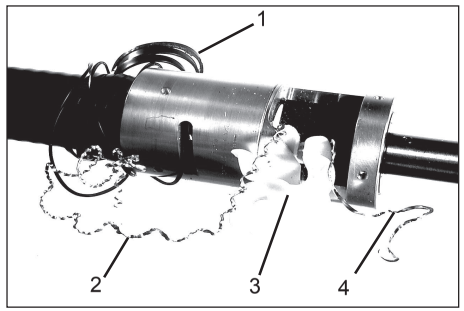

Lorsque vous sentez une résistance, continuez à tourner en poussant fermement : l'outil coupe la gaine (1), le conducteur extérieur (2), le diélectrique (3) et le conducteur central (4) en même temps. Insistez jusqu'à ce que l'outil ne coupe plus de matière.

SPTC 50 AV 1" 5/8
INSTRUCTIONS FOR USE

Cables types
Eupen EC7-50 (5438) ; Andrew LDF7-50A ; Kabelmetal / RFS LCF 1-5/8" Cu 2Y-50

Connectors types
C **...** A158E Elastomer injection watertightness.
C **...** V158E O-ring gasket watertightness.
... : EIA78, EIA158, 716M, 716F, NM50, NF50.

Attention : The use of the tool requires working gloves and goggles.

Description and preliminaries
The SPTC 50 AV 1" 5/8 tool is made up of a cutting-peeling tool and of a flaring out tool. It is driven by a powerful cordless driver drill (≥ 18V, 2.2Ah, 150 rpm).
Use the handle if a cordless driver drill is not available.

Important ! Make a square cut at the end of the cable in an outer conductor valley (fig.1). A short length of jacket can be removed to locate precisely the valley (fig.2).

Cutting and Peeling
Slide the cutting-peeling tool on the prepared cable end. Run the drill and push gently: the tool is peeling the jacket

When you feel some resistance, keep on turning and pushing firmly : the tool is cutting the jacket (1), the outer conductor (2), the dielectric (3) and the center conductor (4) at the same time. Insist until no more materials can be removed.

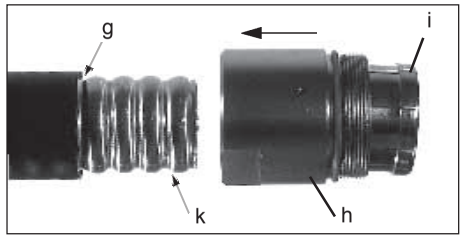

Préparation du conducteur extérieur
Retirez l'outil de coupe-épluchage du câble et contrôlez que quatre annelures et demie soit dénudées (g), que le conducteur extérieur, le diélectrique et le conducteur central sont coupés dans un creux.
Glissez l'arrière (h) du connecteur sur le câble préparé (placez d'abord l'o-ring dans le quatrième creux dans le cas de connecteurs à étanchéité o-ring) et tirez l'arrière pour que la ferrule (i) se place dans le premier creux (k).

Outer conductor preparation
Remove the cutting-peeling tool from the cable and make sure that four and a half corrugations are stripped (g) and the outer conductor, the dielectric and the center conductor cutted in a valley.
Slide the rear (h) of a connector onto the prepared cable (place first the o-ring in the fourth valley in case of o-ring watertighting connectors) and pull it until the clamp (i) is lodged in the first valley (k).

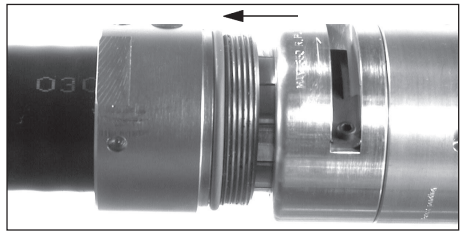

Reculez l'arrière et glissez l'évaseur (préalablement inséré dans l'outil de coupe-épluchage) sur la ferrule jusqu'à ce que la pointe du couteau soit près du conducteur extérieur **sans le toucher**.

Pull the rear away and slide the flaring out tool (previously inserted into the cutting-peeling tool) onto the clamp until the blade is close by the outer conductor **without touching it.**

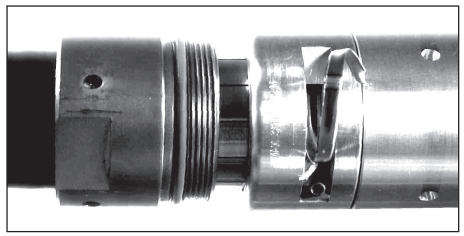

Actionnez la visseuse et poussez pour couper le conducteur extérieur. Continuez jusqu'à ce que l'évaseur ne coupe plus.

Run the drill and push it to cut the outer conductor. Proceed until no more material can be removed.

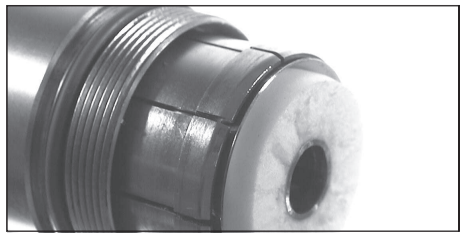

Retirez l'évaseur et nettoyez l'extrémité du câble. Le câble est maintenant préparé.
Pour terminer le montage du connecteur, consultez ses instructions d'installation.
Après chaque préparation complète, nettoyez l'outil (outil de coupe-épluchage + évaseur).

Remove the flaring out tool and clean the cable end. Now the cable is prepared.
To finish the connector installation, consult its installation instructions.
After each full cable preparation, clean the tool (cutting-peeling tool + flaring out tool).

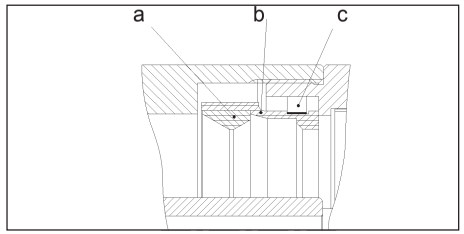

Code de l'outil et des pièces de rechange :
CSPTC50AV158E

a - 06 3326 02	**d** - 06 2690 43
b - 06 3327 02	**e** - 06 2690 07
c - 06 3328 02	**f** - 06 2690 13

Soyez attentif à la position de la pièce **a** dans la pièce **b**.

Order code for the tool and replacement parts :
CSPTC50AV158E

a - 06 3326 02	**d** - 06 2690 43
b - 06 3327 02	**e** - 06 2690 07
c - 06 3328 02	**f** - 06 2690 13

Pay attention to the position of the part **a** in the part **b**.

KABELWERK EUPEN AG
Malmedyer Strasse 9 **B-4700 Eupen, Belgien**
Tel : +32-87-597 000 Fax : +32-87-597 100

AVIS
KABELWERK EUPEN AG décline toute responsabilité en cas de non respect de ces instructions.

NOTICE
KABELWERK EUPEN AG disclaims any liability or responsability for the results of improper or unsafe installation practices.

INSTALLATION INSTRUCTIONS FOR "EUPEN" GROUNDING CLAMPS

Cable Type : 5438 (1 5/8") - 5328 (1 1/4") - 5228 (7/8") - 5229 '7/8" AIR) - 5128 (1/2") - 5088 (3/8") - 5062 (1/4")

Clamp Type : GCS 1 5/8" - GCS 1 1/4" - GCS 7/8" - GCS 1/2" - GCS 3/8" - GCS 1/4"

1. Install clamp where cable runs straight.
   Realize an incision in the cable outer sheath as shown in fig. 1, using an adhesive tape wrapped around the cable to guide the cut.
   Don' t damage the cable outer conductor by cutting away the outer sheath.

fig. 1.

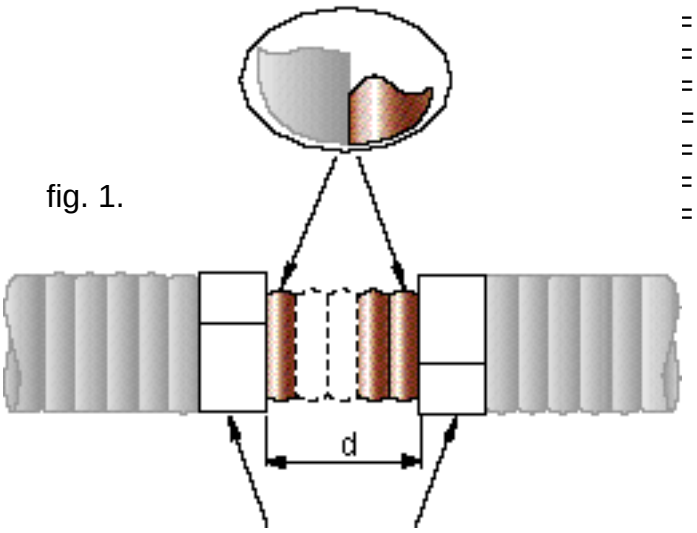

= 30 mm (= 3 corrugations)
= 26 mm (= 3 corrugations)
= 21 mm (= 3 corrugations)
= 21 mm
= 25 mm (= 5 corrugations)
= 20 mm (= 5 corrugations)
= 24 mm (= 7 corrugations)

The adhesive tape guide, should be removed before installation of the clamp!

2. Remove the adhesive tape guide. Clean the cable outer conductor at the incision place in order to ensure a good electrical contact between cable outer conductor and the contact clip of grounding clamp.

3. Open the grounding clamp carefully (incl. rubber cylinder and grounding clip which fits the incision) and place it over the incision of the cable outer sheath. Close the clamp by pressing radially by hand the outer metallic shells.

4. Tighten completely the fixing screw of the outer metal shells of the clamp.
   The rubber cylinder seals the clamp perfectly after tightening.
   No special sealing (silicon rubber of similar) is needed to thighten the grounding clamp.

5. Fix grounding cable of the clamp straight and as short as possible to ground terminal.
   Screw the grounding cable lug on ground terminal.

KABELWERK EUPEN AG
CABLERIE D'EUPEN S.A.
KABELFABRIEK EUPEN N.V.

Malmedyer Str. 9 - B-4700 EUPEN - BELGIUM

Tel.: +32(0)87.59.70.00 **http://www.eupen.com**
Fax: +32(0)87.59.71.00 **e-mail:info@eupen.com**

EUPEN CABLE USA Inc.

2323 34th Way North - Bldg. B & C
Largo, Florida 33771

USA

Tel.: +1 727-527-7955
Toll Free (US): 800-419-5100
Fax: +1 727-528-0751
http://www.usa.eupen.com
e-mail:info@usa.eupen.com

EUPEN CABLE ASIA Inc.

651 Severina Ave.,
Severina Subdivision,
Km 18, West Service Road,
Parañaque City

PHILIPPINES

Tel.: +632-546-0546/0547
Fax: +632-824-39-56
e-mail:eupenmla@pworld.net.ph

EUPEN CABLE CANADA

23 Shetland Crescent
St. Catharines
Ontario L2P 3P6

CANADA

Tel.: +1 416 804 6146
Fax: +1 905 321 0726
e-mail:sales.canada@eupen.com

EUPEN CABLE ARGENTINA Inc.

Gualeguaychú 876 PB. C
C1407AKR - Buenos Aires

ARGENTINA

Tel.: +54 11 46360716
Fax: +54 11 46360716
e-mail:mcondoluci@infovia.com.ar

EUPEN FUNKTECHNIK GmbH

Wiesenweg 19
D-59457 Werl-Westönnen

GERMANY

Tel.: +49 2922 87950
Fax: +49 2922 87952
e-mail:bytec.gmbh.werl@t-online.de

EUPEN CABLE LATIN AMERICA

2325, NE 197th St.
Miami, Florida 33180

USA

Tel.: +1 305-935-3762
Fax: +1 305-935-6803
e-mail:manuel_molina@eupen.com

EUPEN CABLE GB Ltd.

PO Box 7228
Wantage D.O.
OX12 9FS

UNITED KINGDOM

Tel.: +44 7050 159863
0800 956 7228 (Toll Free)
Fax: +44 7050 159864
e-mail:richard@eupengb.com

EUPEN CABLES FRANCE

ZAE Les Champs Guillaume
3, rue Alphonse Beau de Rochas
F-95240 Cormeilles en Parisis

FRANCE

Tel.: +33 1 399 75273
Fax: +33 1 399 75441
e-mail:eupencable@free.fr

50 Ohm Cables 12/00 - 5000